IMPORTANCE OF MATERIAL INPUT - QUANTITY OF STRUCTURAL SILICONE

ALTERNATIVE -ONE

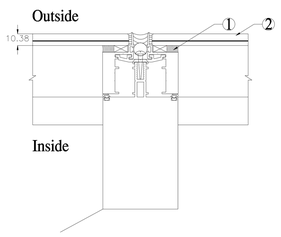

ALTERNATIVE - TWO

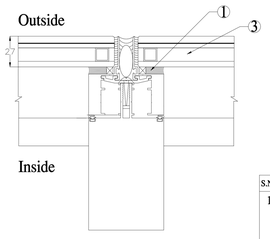

TYPICAL MULLION DETAIL AT VISION AREA

S.No	DETAIL
1.	STRUCTURAL SILICONE SEALANT WITH BITE OF _mm & GLUE LINE OF _mm DC-983 (TWO PART) OR DC- 995 (SINGLE PART) OF DOWCORNING OR SSG-4400 (TWO PART) OR SSG - 4000 (SINGLE PART) OF GE SILICON
2.	LAMINATED GLASS AS PER SPEC; 6 + (0.38 TO 1.52 PVB) + 4
3.	DOUBLE GLASS UNIT AS PER SPEC. OUTSIDE LAMINATED GLASS 6 + (0.38 TO 1.52 PVB) + 4; AIRGAP: 12mm INSIDE: 6mm TEMPERED GLASS

CAN THE QUANTITY OF STRUCTURAL SILICON BE COMMON FOR DEAD LOAD OF SINGLE / LAMINATED / DOUBLE GLASS ? ? ?
AND FOR VARIABLE WIND LOAD FOR EACH BUILDING ???

NOTES:-

DRWN	VINOD	DATE:	SCALE:
CHCKD	MANISH	DRG. NO 13	
APRVD	G.K.V.	REV. NO.	

ACADEMIC INFORMATION ON DESIGN ASPECTS OF STRUCTURAL GLAZING

TITLE
IMPORTANCE OF MATERIAL INPUT - QUANTITY OF STRUCTURAL SILICONE

NEMCON FACADE CONSULT
Plot No. 569 SECTOR 5, VASHALI, GHAZIABAD 201-012
Ph.: 91-120 - 4311642
Mob: 9310372927
E.Mail: nemconfacade@yahoo.co.in

IMPORTANCE OF MATERIAL INPUT - QUANTITY OF STRUCTURAL SILICONE

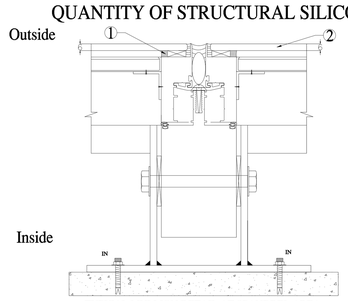

TYPICAL MULLION DETAIL AT SPANDREL AREA

S.No	DETAIL
1.	STRUCTURAL SILICONE SEALANT WITH BITE OF _mm & GLUE LINE OF _mm DC-983 (TWO PART) OR DC- 995 (SINGLE PART) OF DOWCORNING OR SSG-4400 (TWO PART) OR SSG - 4000 (SINGLE PART) OF GE SILICON
2.	6mm THICK TEMPERED GLASS AS/SPECFICATION

CAN THE QUANTITY OF STRUCTURAL SILICON BE COMMON FOR DEAD LOAD OF SINGLE / LAMINATED / DOUBLE GLASS ? ? ?
AND FOR VARIABLE WIND LOAD FOR EACH BUILDING ???

NOTES:-

DRWN	VINOD	DATE:	SCALE:
CHCKD	MANISH	DRG. NO 14	
APRVD	G.K.V.	REV. NO.	

ACADEMIC INFORMATION ON DESIGN ASPECTS OF STRUCTURAL GLAZING

TITLE
IMPORTANCE OF MATERIAL INPUT - QUANTITY OF STRUCTURAL SILICONE

NEMCON FACADE CONSULT
Plot No. 569 SECTOR 5, VASHALI, GHAZIABAD 201-012
Ph.: 91-120 - 4311642
Mob: 9310372927
E.Mail: nemconfacade@yahoo.co.in

IMPORTANCE OF MATERIAL INPUT - QUANTITY OF STRUCTURAL SILICONE

ALTERNATIVE -ONE

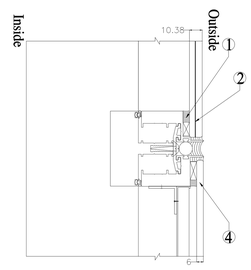

ALTERNATIVE - TWO

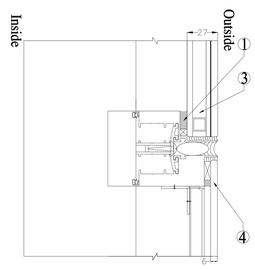

TYPICAL TRANSOM DETAIL AT SPANDREL AND VISION AREA

S.No	DETAIL
1.	STRUCTURAL SILICONE SEALANT WITH BITE OF _mm & GLUE LINE OF _mm DC-983 (TWO PART) OR DC- 995 (SINGLE PART) OF DOWCORNING OR SSG-4400 (TWO PART) OR SSG - 4000 (SINGLE PART) OF GE SILICON
2.	LAMINATED GLASS AS PER SPEC; 6 + (0.38 TO 1.52 PVB) + 4
3.	DOUBLE GLASSUNIT OUTSIDE LAMINATED GLASS AS PER SPEC; 6 + (0.38 TO 1.52 PVB) + 4; AIRGAP:12mm INSIDE 6mm TEMPERED GLASS
4.	6mm THICK TEMPERED GLASS AS/SPECFICATION

CAN THE QUANTITY OF STRUCTURAL SILICON BE COMMON FOR DEAD LOAD OF SINGLE / LAMINATED / DOUBLE GLASS ? ? ?
AND FOR VARIABLE WIND LOAD FOR EACH BUILDING ???

NOTES:-

DRWN	VINOD	DATE:	SCALE:
CHCKD	MANISH	DRG. NO 15	
APRVD	G.K.V.	REV. NO.	

ACADEMIC INFORMATION ON DESIGN ASPECTS OF STRUCTURAL GLAZING

TITLE
IMPORTANCE OF MATERIAL INPUT - QUANTITY OF STRUCTURAL SILICONE

NEMCON FACADE CONSULT
Plot No. 569 SECTOR 5, VASHALI, GHAZIABAD 201-012
Ph.: 91-120 - 4311642
Mob: 9310372927
E.Mail: nemconfacade@yahoo.co.in